OUTLINE 3-PHASE INDUCTION MOTOR	TOTALLY ENCLOSED FAN COOLED SQUIRREL CAGE ROTOR ANTI-FRICTION BEARING	PROJECT NO:
		CUSTOMER: PO. NO: ORDER NO:

OUTPUT	POLE	SYN. SPEED	VOLT.	FREQ	INSUL.	TIME RATING	MODEL	FRAME NO.
		RPM	V	HZ	F	CONT.	TIK-FCKW	N400LL

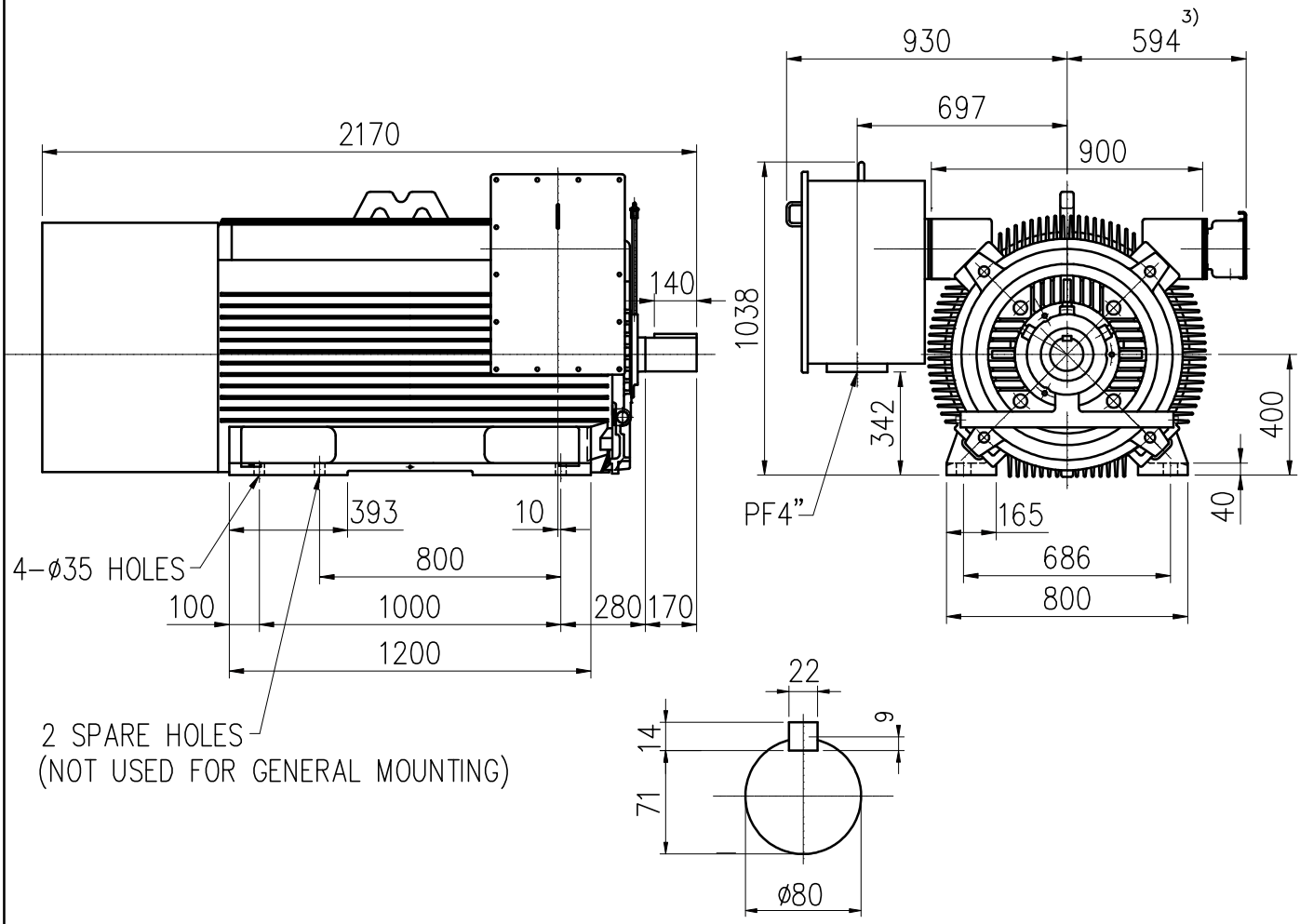

Note:

1) Tolerance of shaft end diameter D: m6
2) Tolerance of shaft center height H: +0 , -1.0
3) Auxiliary terminal box is optional and dependent on specified accessories.
4) For direct coupling
5) Approximate weight = 4200 kg
6) Drive end bearing: 6218C3
   Opposite drive end bearing: 6218C3
7) Direction of rotation : C.W (viewed from non-drive end)

Preliminary Drawing for Reference Only

TATUNG

BASIC DWG NO: AL-FB-5610

CERTIFIED BY:		DATE:
DESIGNED	C.Y.WEN	DIMENSIONS IN mm
CHECKED	T.F.CHENG	3RD ANGLE PROJECTION
APPROVED	T.F.CHENG	DATE: NOV.30.2009