OUTLINE
3-PHASE
INDUCTION MOTOR

TOTALLY ENCLOSED
FAN COOLED
SQUIRREL CAGE ROTOR
ANTI-FRICTION BEARING

PROJECT NO:

CUSTOMER:
PO. NO:
ORDER NO:

OUTPUT	POLE	SYN. SPEED	VOLT.	FREQ	INSUL.	TIME RATING	MODEL	FRAME NO.
		RPM.	V.	HZ	F	CONT.	TIK-FCKTW	N315LL

Preliminary Drawing for Reference Only

*THRUST LOAD CAPACITY
_____KGS CONTINUOUS DOWN
_____KGS MOMENTARY DOWN
_____KGS INSTANTANEOUS UP
_____NONREVERSE RATCHET MECHANISM
DIRECTION OF ROTATION
_____(VIEWED FROM TOP SIDE)

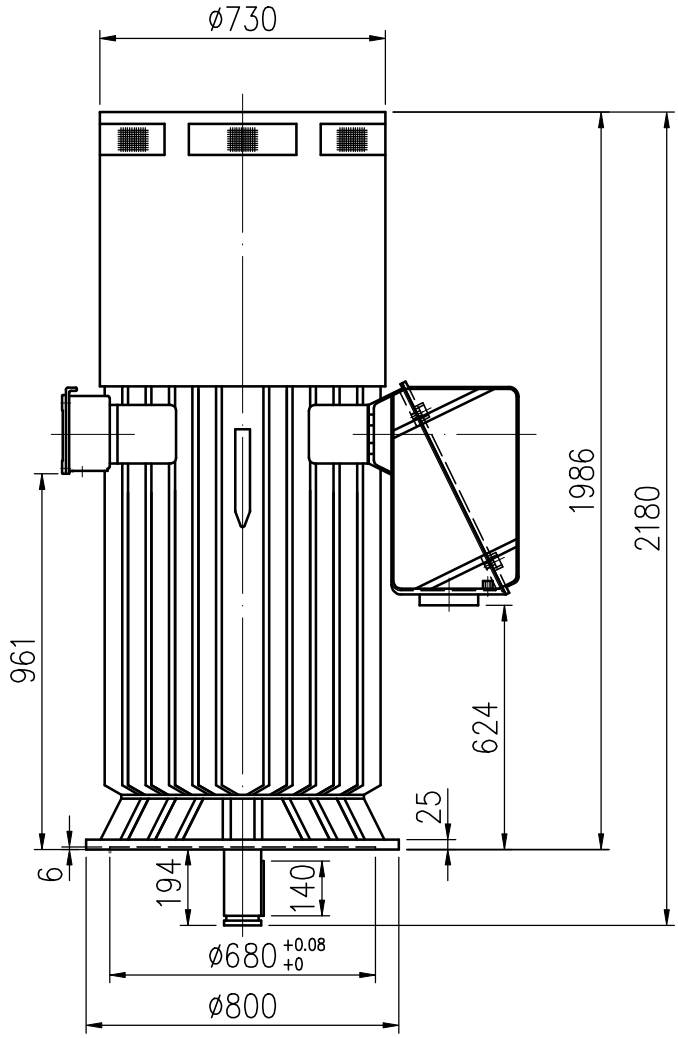

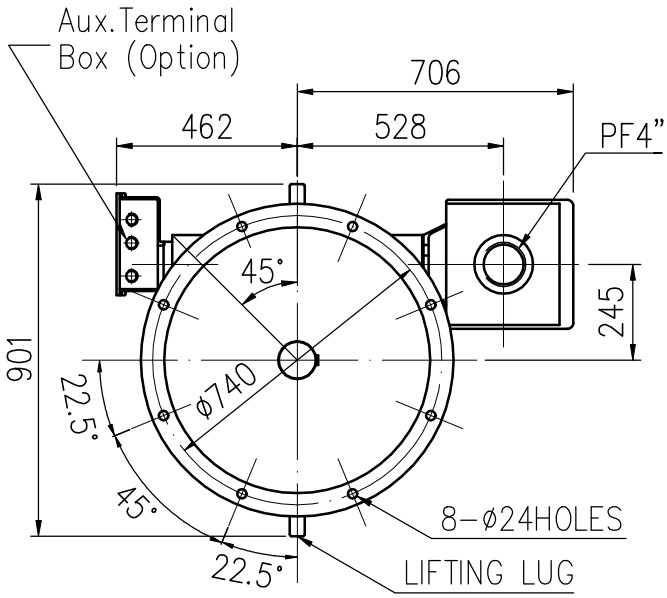

VIEW FROM SHAFT END

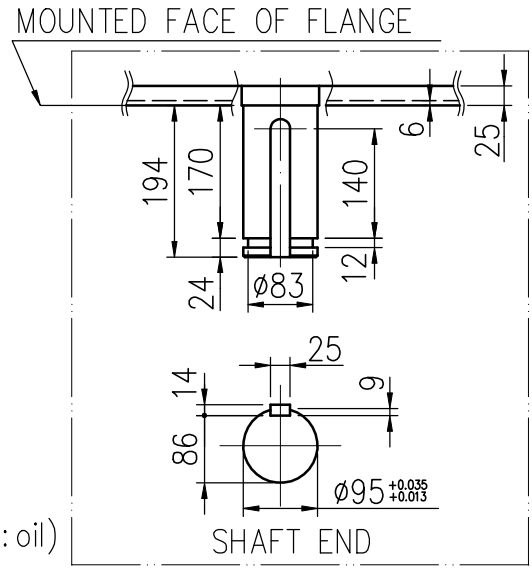

Note:
(1)Tolerance of shaft end diameter : m6
(2)For direct coupling
(3)Apporximate weight=2500kg
(4)Auxiliary terminal box is optional and dependent on specified accessories
(5)Drive end bearing: 6320C3(lubrication: grease)
opposite drive end bearing: 29330+6028(lubrication: oil)
(Thrust bearing)

TATUNG

BASIC DWG NO: AL-FB-5306

CERTIFIED	BY:	DATE:
DESIGNED	Y.R.YANG	DIMENSIONS IN mm
CHECKED	T.F.CHENG	3RD ANGLE PROJECTION
APPROVED	T.F.CHENG	DATE: FEB.20.2010