PROJECT NO:

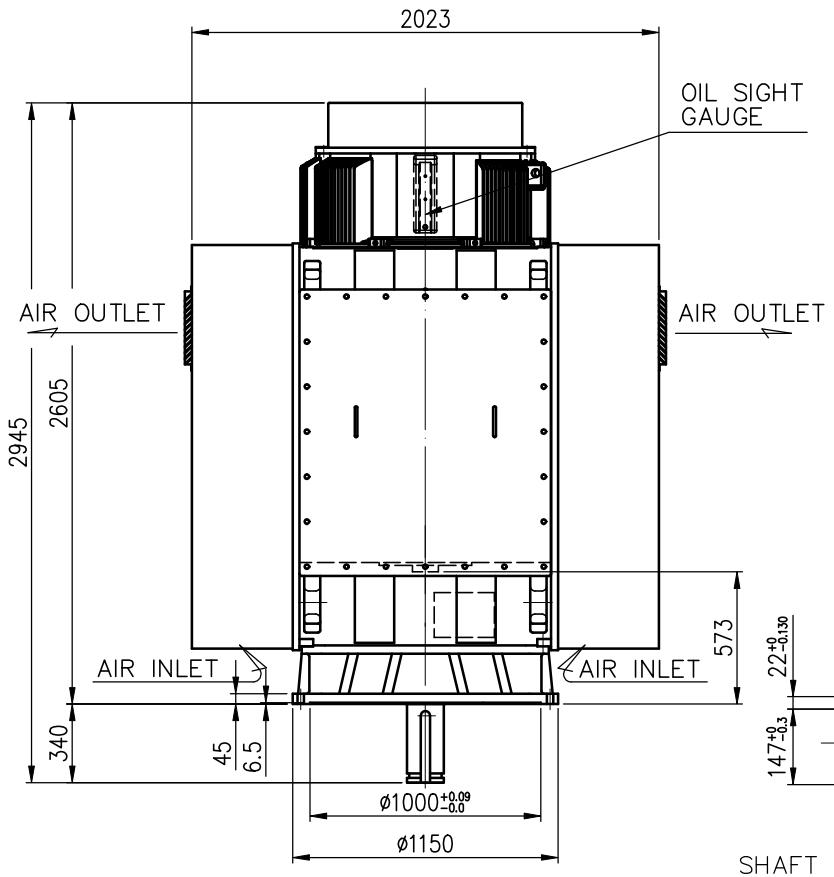

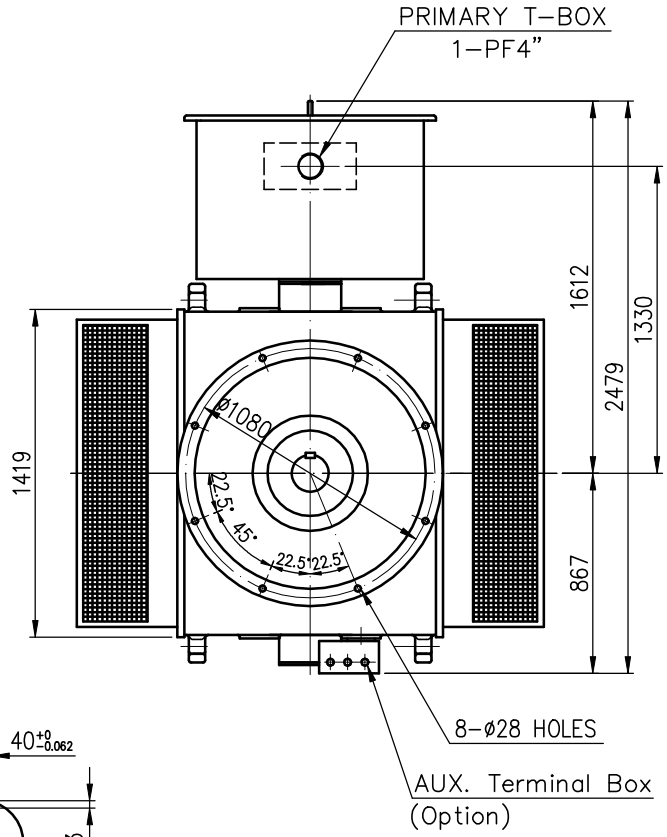

VIEW FROM DRIVE END

TECHNICAL INFORMATION

1. ENCLOSURE: WPII
2. BEARING LUBRICATION:
   DRIVE END: OIL
   NON DRIVE END : OIL
3. THRUST LOAD CAPAITY.
   _____KG CONTINUOUS DOWN
   _____KG MOMENTARY DOWN
   _____KG INSTANTANEOUS UP
4. ROTATION: _____
   VIEW FROM NON-DRIVE END
5. _____NONREVERSE RATCHET MECHANISM

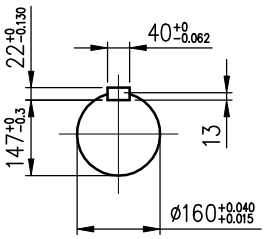

SHAFT END DIMENIONS

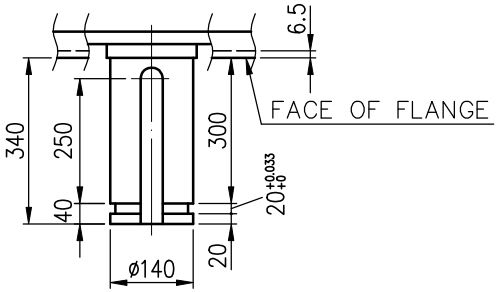

Preliminary Drawing for Reference Only

CERTIFIED BY: _____ DATE: _____

ADDITIONAL INFORMATION	OUTPUT	POLES	VOLTS	FREQ. Hz	SYN. SPEED r/min		BEARING	PROTECTION IP-23
							LOAD SIDE 6044	APPROX. WEIGHT MOTOR 9800 kg
	TYPE TIK	FORM VCKTWII	INS.CLASS F	RATING S1	FRAME N5014V	FLANGE	OPP.L.SIDE 29340 6038	

REVISIONS			
		REV.MARK	
		DATE	
		APPROVED BY	
		REVISED BY	
		CONTENT	

SCALE

UNITS MM

APPROVED BY T.F.CHENG FEB.11.2011

CHECKED BY T.F.CHENG FEB.11.2011

DESIGNED BY C.Y.WEN FEB.11.2011

DRAWN BY C.Y.WEN FEB.11.2011

TATUNG

TITLE

OUTLINE FOR THREE PHASE INDUCTION MOTOR

DRAWING NO. *AL-VB-1785*

REV.MARK 00