OUTLINE
3-PHASE
INDUCTION MOTOR

TOTALLY ENCLOSED FAN COOLED,SQUIRREL CAGE ROTOR

FILE NO:

CUSTOMER:
PO. NO:
ORDER NO:

OUTPUT	POLE	SYN. SPEED	VOLT.	FREQ	TIME RATING	MODEL	FRAME NO.
					CONT.	TEFC	447TC

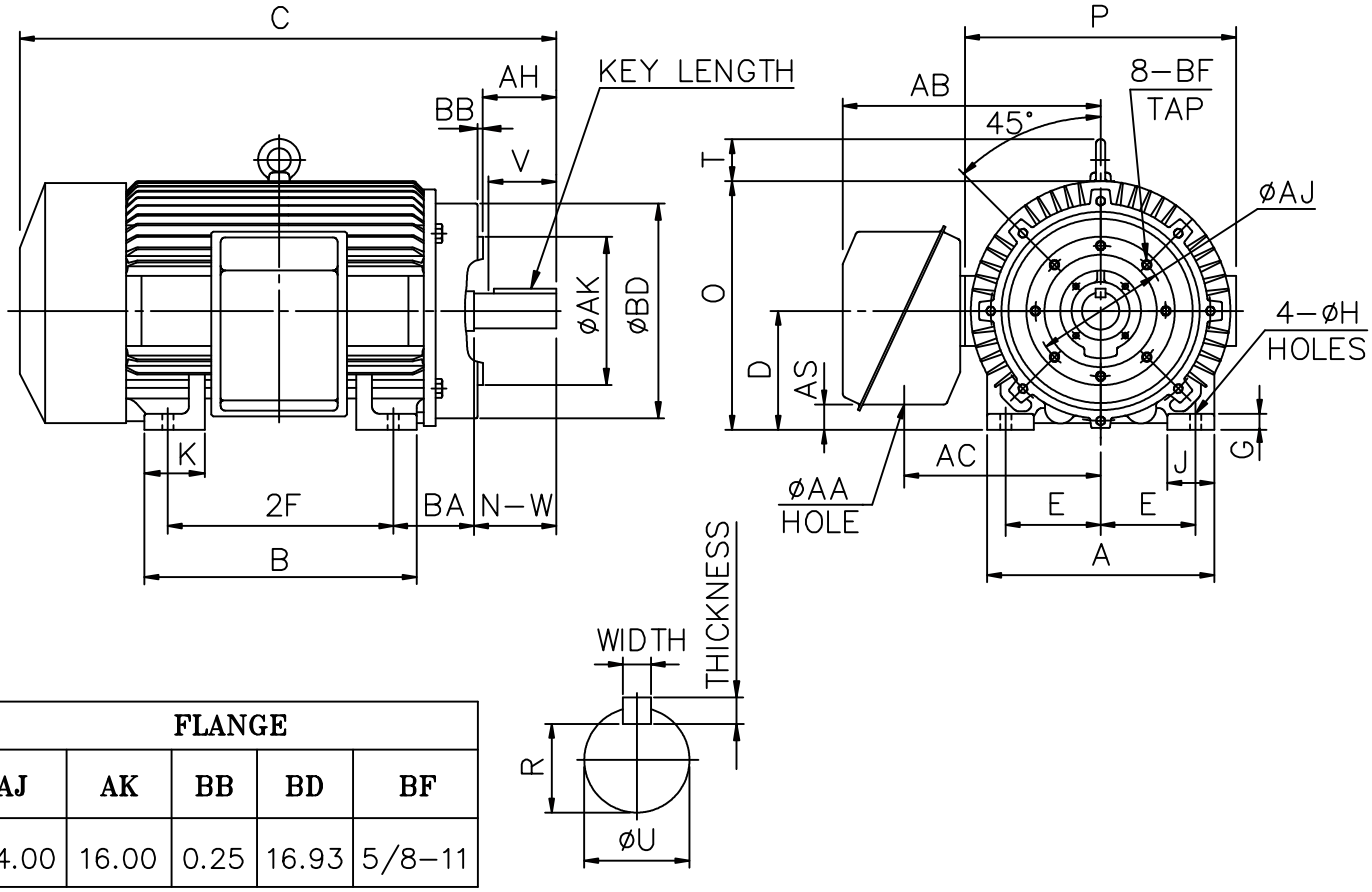

FLANGE				
AJ	AK	BB	BD	BF
14.00	16.00	0.25	16.93	5/8-11

A	B	C	D	E	2F	G	H	J	K	O+T	P	AA	AB	AH
22.05	22.83	57.55	11.00	9.00	20.00	1.18	0.83	4.33	5.71	27.83	26.77	4.65	22.95	9.875

AC	AS	BA	KEY			KEYSEAT	SHAFT EXTENSION			BEARING NO.		APPROX WEIGHT
			WIDTH	THICK-NESS	LENGTH	R	N-W	U	V	D.E	O.D.E	
18.03	2.34	7.50	0.875	0.875	6.91	2.880	8.50	3.375	8.25	6220	6315	2790 lb

NOTE:1.TOLERANCE OF SHAFT END DIAMETER U: +0.000,-0.001
2.TOLERANCE OF SHAFT CENTER HEIGHT D:+0.000,-0.06
3.DIMENSION R TOLERANCE:+0.000,-0.015
4.DIMENSION AK TOLERANCE: +0.000,-0.005
5.DIMENSION V IS LENGTH OF STRAIGHT PART OF SHAFT.
6. F CLASS INSULATION.

TATUNG

CERTIFIED BY : _____		DATE : _____
DESIGNED	W. D. KUO	DWG. NO: AS-832467
CHECKED	L. J. LEE	3RD ANGLE PROJECTION
APPROVED	T. M. LIAO	DIMENSION IN inch