EXTRA-MAX ALTERNATING CURRENT MOTORS

SQUIRREL-CAGE INDUCTION

ENCLOSURE: OPEN DRIP PROOF
MOUNTING: FOOT

CAST IRON FRAME
FRAME 182T

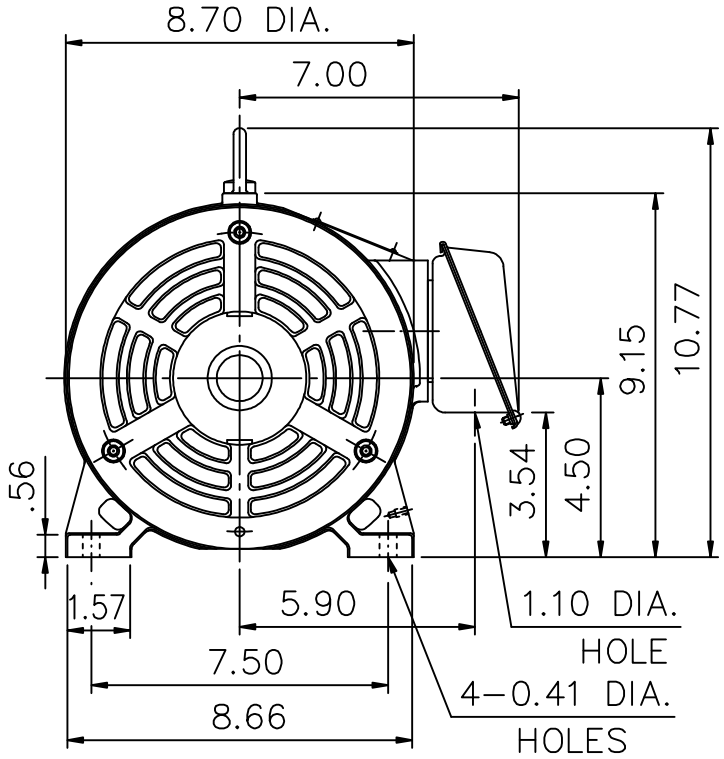

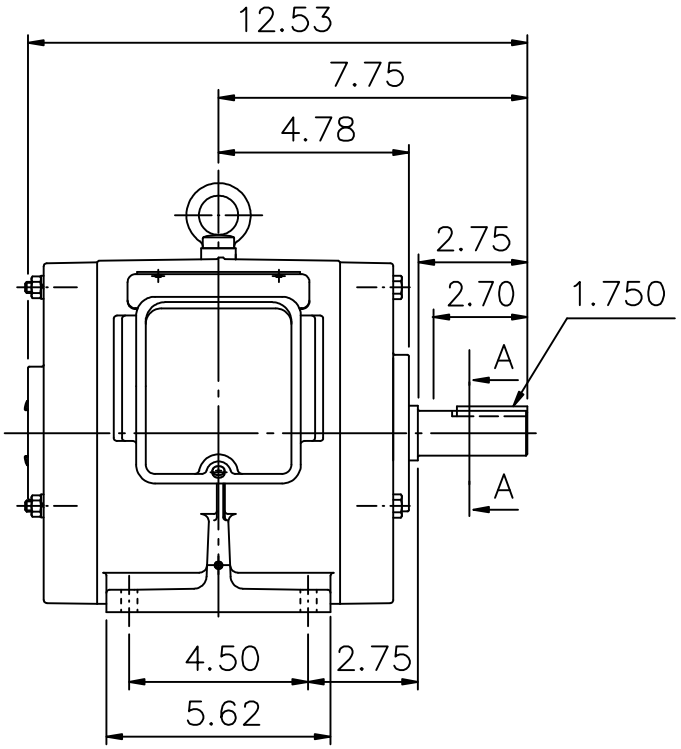

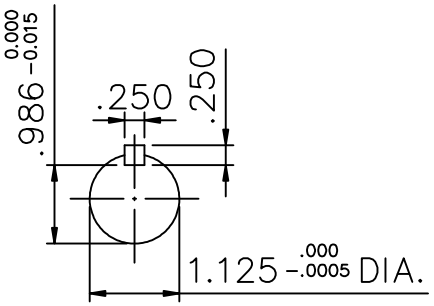

2:1

A-A SECTION

(1) DIMENSIONS ARE IN INCHES.
(2) APPROXIMATE WEIGHT = 1.5 HP, 6 P, -90 LBS.
3 HP, 4 P, -90 LBS.
5 HP, 2 P, -86 LBS.
(3) DRIVE END BEARING 6207ZZ
OPPOSITE DRIVE END BEARING 6206ZZ
(4) INTERNAL VOLUME OF CONDUIT BOX=30.2 CU, IN.

Preliminary Drawing for Reference Only

OUTPUT	POLE	SYN. SPEED	VOLT	FREQ.

CERTIFIED BY _____ DATE _____

TATUNG

DR. BY W. D. KUO
CK. BY L. J. LEE
APP. BY T. M. LIAO
DATE NOV. 27. 2008

DIMENSION SHEET

AS-880391

ISSUE DATE JAN. 18. 1998