Super-Max 841 ALTERNATING CURRENT MOTORS

SQUIRREL-CAGE INDUCTION

ENCLOSURE: TOTALLY ENCLOSED
MOUNTING: FOOT WITH C-FACE

CAST IRON FRAME

FRAME 145TC

COOLING: FAN COOLED

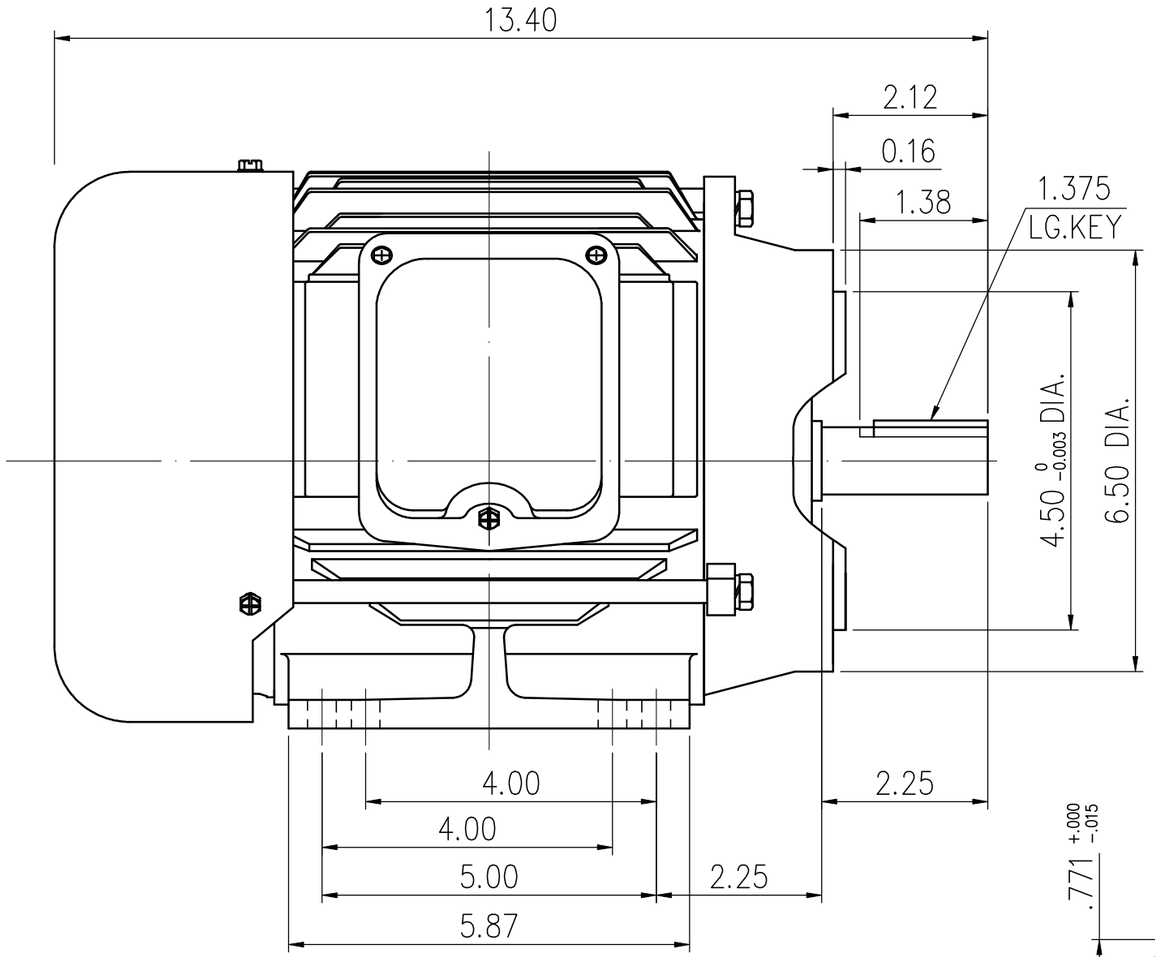

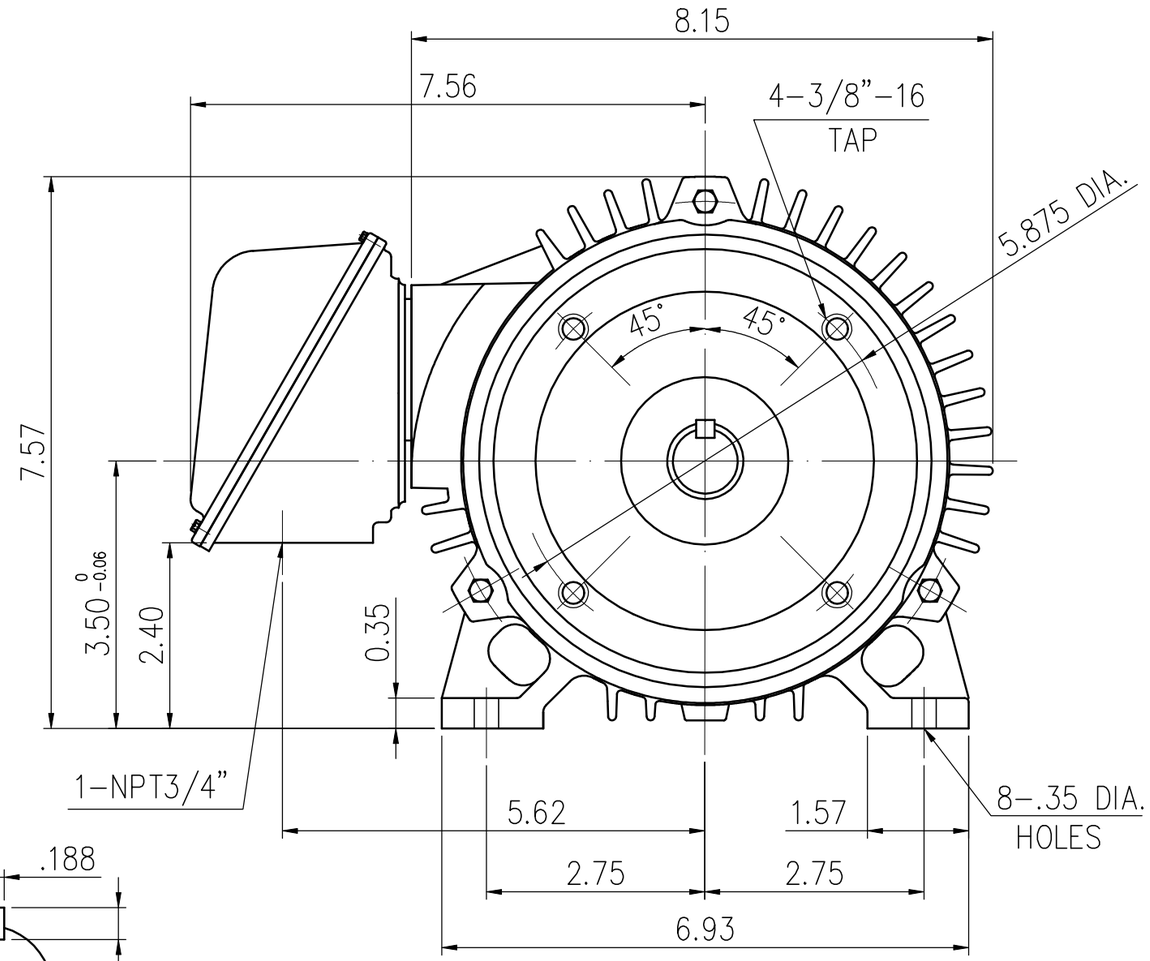

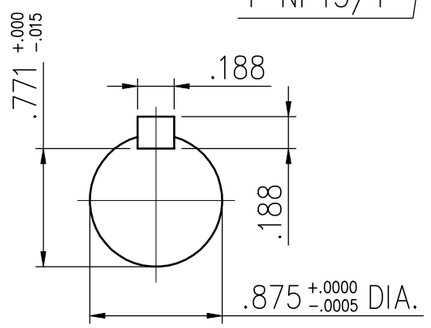

(1) DIMENSIONS ARE IN INCHES.
(2) APPROXIMATE WEIGHT = 2 HP, 2 P, -68.5 lb.
2 HP, 4 P, -63.5 lb.
1 HP, 6 P, -63.5 lb.
1.5HP, 4 P, -60.5 lb.
(3) DRIVE END BEARING 6205Z/C3
OPPOSITE DRIVE END BEARING 6205Z/C3
(4) INTERNAL VOLUME OF CONDUIT BOX = 47.1 CU, IN.

FRAME- _____ CERTIFIED FOR- _____
ORDER- _____ ITEM _____ HP- _____ RPM- _____ PH- _____ HZ- _____ VOLTS- _____

TATUNG

DR. BY S. L. TSAI
CK. BY L. J. LEE
APP. BY L. J. LEE
DATE APR. 26. 19

DIMENSION SHEET

AS-081459