SUPERMAX-841 SEVERE DUTY ALTERNATING CURRENT MOTORS

SQUIRREL-CAGE INDUCTION

ENCLOSURE: TOTALLY ENCLOSED
MOUNTING: FOOT

CAST IRON FRAME
FRAME 256T

COOLING: FAN COOLED

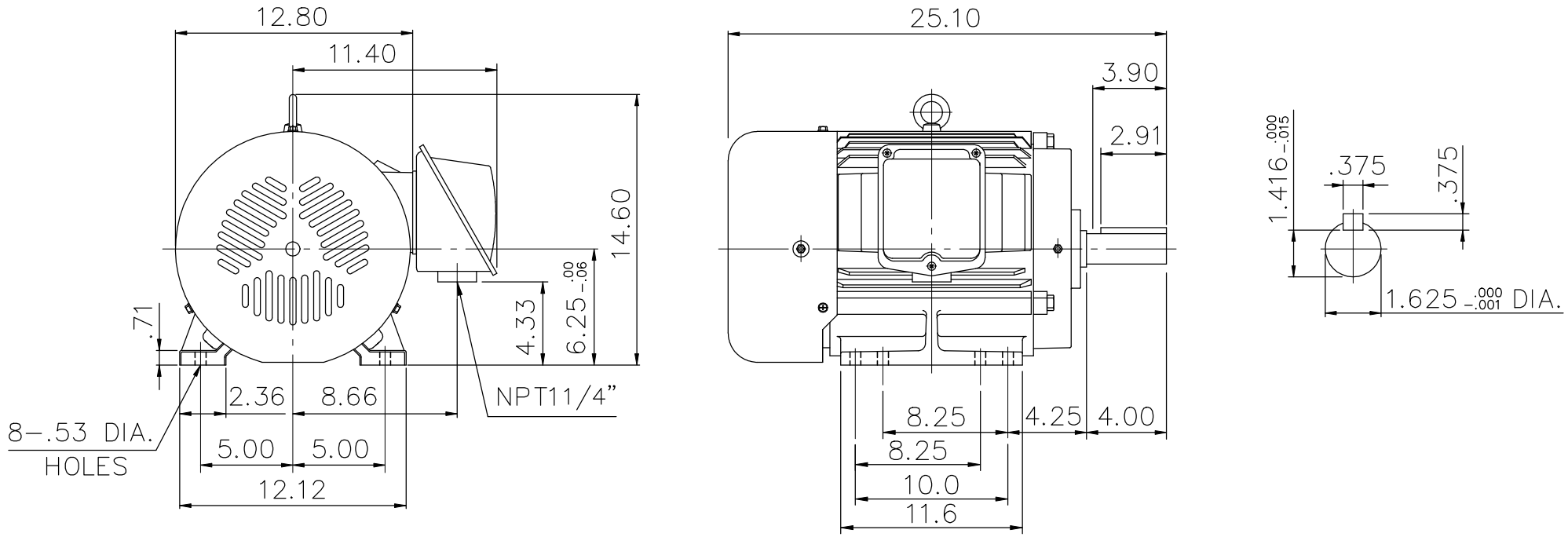

(1) DIMENSIONS ARE IN INCHES.
(2) APPROXIMATE WEIGHT = 334 LBS
(3) DRIVE END BEARING 6310C3
OPPOSITE DRIVE END BEARING 6208C3
(4) INTERNAL VOLUME OF CONDUIT BOX=100.5 CU, IN.

Preliminary Drawing for Reference Only

OUTPUT	POLE	SYN. SPEED	VOLT	FREQ.

CERTIFIED BY _____ DATE _____

TATUNG

DR. BY W. D. KUO
CK. BY L. J. LEE
APP. BY T. M. LIAO
DATE NOV. 27. 2008

DIMENSION SHEET

AS-873082