SUPER-MAX ALTERNATING CURRENT MOTORS

SQUIRREL-CAGE INDUCTION

ENCLOSURE: TOTALLY ENCLOSED
MOUNTING: FOOT

CAST IRON FRAME
FRAME 184T

COOLING: FAN COOLED

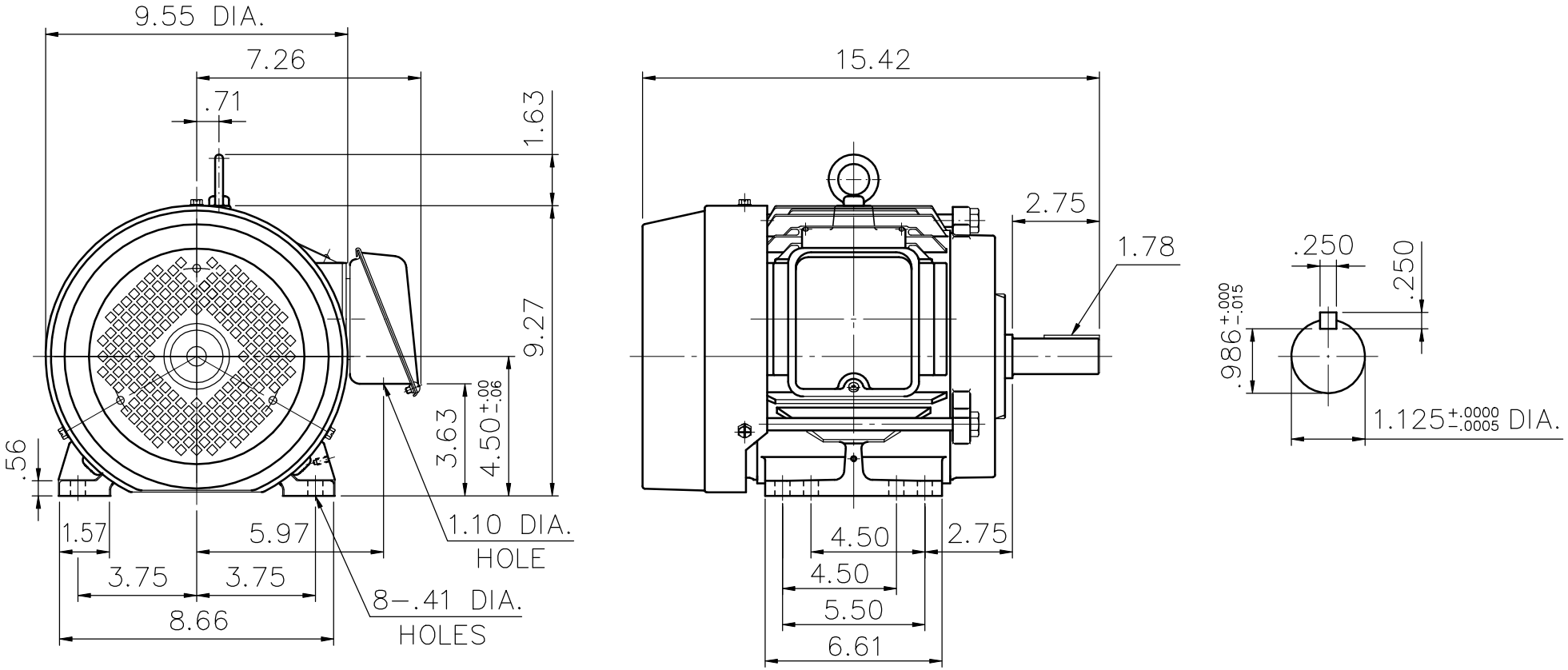

(1) DIMENSIONS ARE IN INCHES.
(2) APPROXIMATE WEIGHT = 5 HP, 2 P, - 92 LBS.
5 HP, 4 P, - 95 LBS.
2 HP, 6 P, - 95 LBS.
(3) DRIVE END BEARING 6207ZZ
OPPOSITE DRIVE END BEARING 6206ZZ
(4) INTERNAL VOLUME OF CONDUIT BOX= 30.2 CU, IN.

Preliminary Drawing for Reference Only

OUTPUT	POLE	SYN. SPEED	VOLT	FREQ.

CERTIFIED BY _____ DATE _____

TATUNG

DR. BY W. D. KUO
CK. BY L. J. LEE
APP. BY T. M. LIAO
DATE NOV. 27. 2008

DIMENSION SHEET

AS-870390