OUTLINE 3-PHASE INDUCTION MOTOR	TOTALLY ENCLOSED FAN COOLED SQUIRREL CAGE ROTOR ANTI-FRICTION BEARING	PROJECT NO: CUSTOMER: PO. NO: ORDER NO:

OUTPUT	POLE	SYN. SPEED	VOLT.	FREQ	INSUL.	TIME RATING	MODEL	FRAME NO.
		RPM.	V.	HZ	F	CONT.	TIK-FCKW	N5009

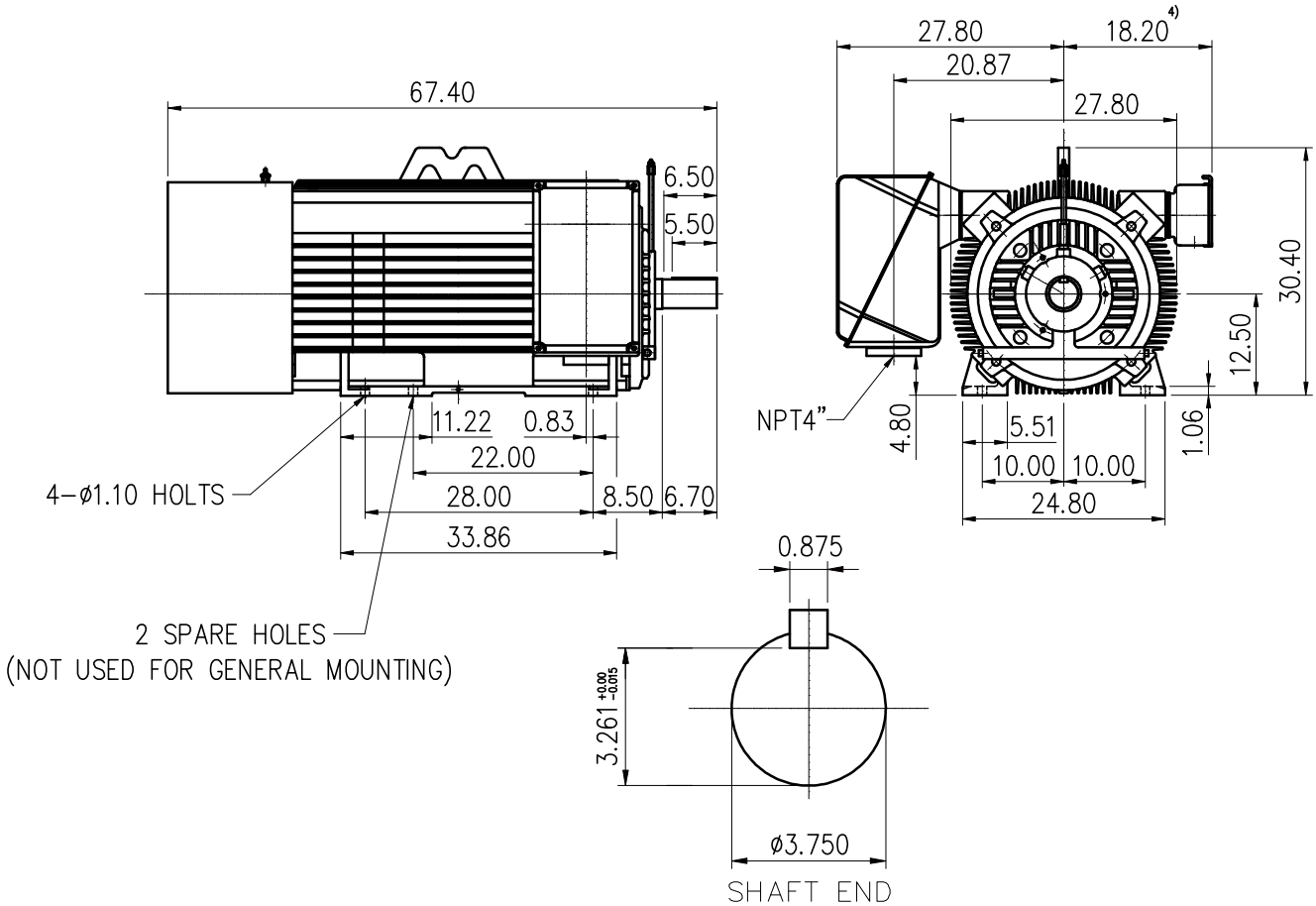

Note:

1) Tolerance of shaft center height : +0.00 inch ~ −0.06 inch.
2) Tolerance of shaft end diameter : +0.00 inch ~ −0.001 inch.
3) For direct coupling.
4) Auxiliary terminal box is optional and dependent on specified accessories.
5) Approximate weight = 4405 lbs.
6) Drive end bearing: 6222.
   Opposite drive end bearing: 6222.
7) Direction of rotation : C.W (viewed from non-drive end).
8) Total length will be extended 11.8 inch to meet 85dBA for 4 pole motors.

Preliminary Drawing for Reference Only

CERTIFIED BY:		DATE:
DESIGNED	C.Y.WEN	DIMENSIONS IN inch
CHECKED	T.F.CHENG	3RD ANGLE PROJECTION
APPROVED	T.F.CHENG	DATE: NOV.30.2009

TATUNG

BASIC DWG NO: AL-FB-5625