| OUTLINE 3-PHASE INDUCTION MOTOR | TOTALLY ENCLOSED<br>FAN COOLED<br>SQUIRREL CAGE ROTOR<br>ANTI-FRICTION BEARING | PROJECT NO:<br>CUSTOMER:<br>PO. NO:<br>ORDER NO: |
|---|---|---|

| OUTPUT | POLE | SYN. SPEED | VOLT. | FREQ | INSUL. | TIME RATING | MODEL | FRAME NO. |
|---|---|---|---|---|---|---|---|---|
| | | RPM. | V. | HZ | F | CONT. | TIK-FCKW | N5011 |

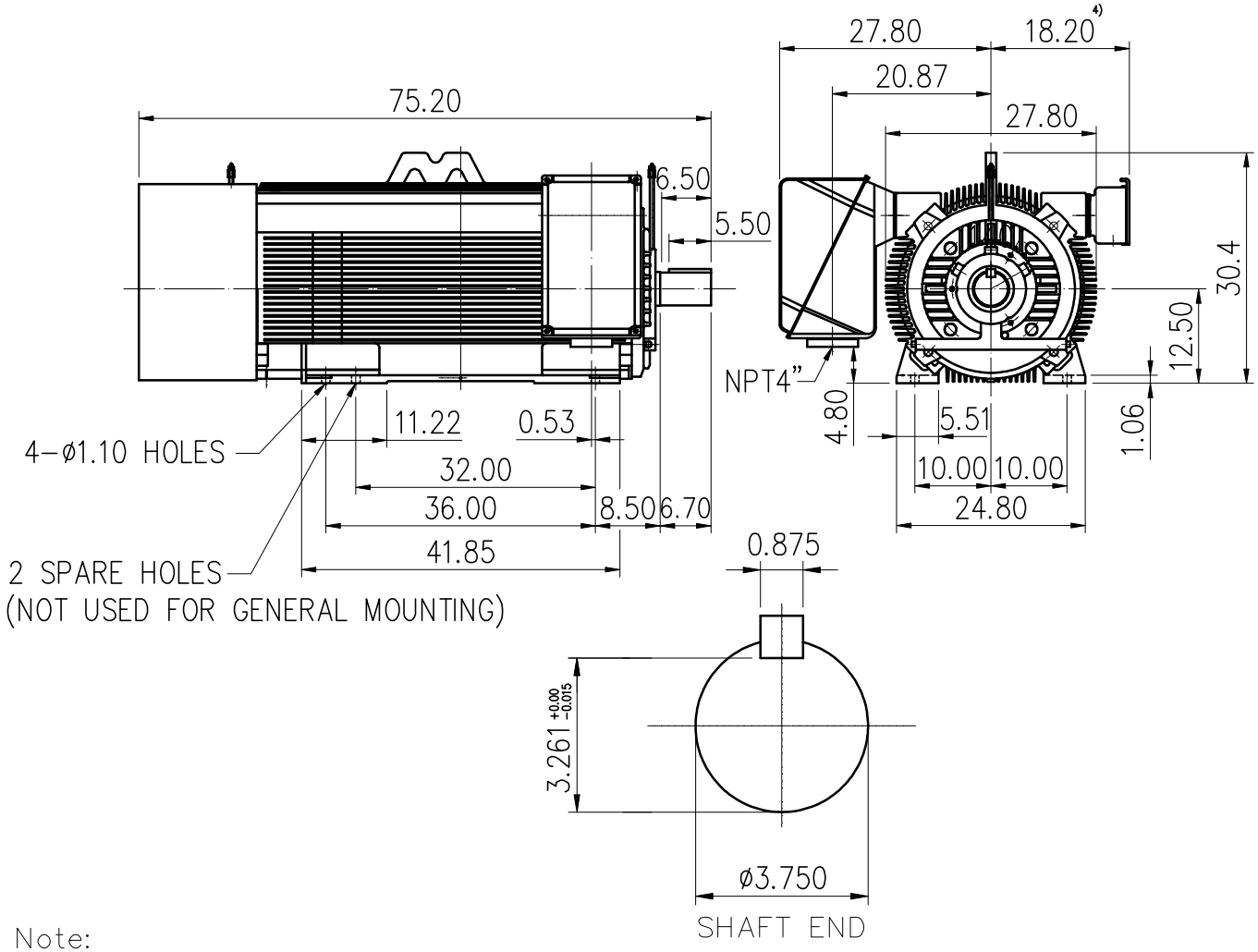


Note:

1) Tolerance of shaft center height : +0.00 inch ~ −0.06 inch.
2) Tolerance of shaft end diameter : +0.00 inch ~ −0.001 inch.
3) For direct coupling.
4) Auxiliary terminal box is optional and dependent on specified accessories.
5) Approximate weight = 5070 lbs.
6) Drive end bearing: 6222.
   Opposite drive end bearing: 6222.
7) Direction of rotation : C.W (viewed from non-drive end).
8) Total length will be extended 11.8 inch to meet 85dBA for 4 pole motors.

Preliminary Drawing for Reference Only

TATUNG

BASIC DWG NO: AL-FB-5628

| CERTIFIED BY: | | DATE: |
|---|---|---|
| DESIGNED | C.Y.WEN | DIMENSIONS IN inch |
| CHECKED | T.F.CHENG | 3RD ANGLE PROJECTION |
| APPROVED | T.F.CHENG | DATE: NOV.30.2009 |