SUPER-MAX ALTERNATING CURRENT MOTORS

SQUIRREL-CAGE INDUCTION

ENCLOSURE: TOTALLY ENCLOSED
MOUNTING: FOOT

CAST IRON FRAME
FRAME 215T

COOLING: FAN COOLED

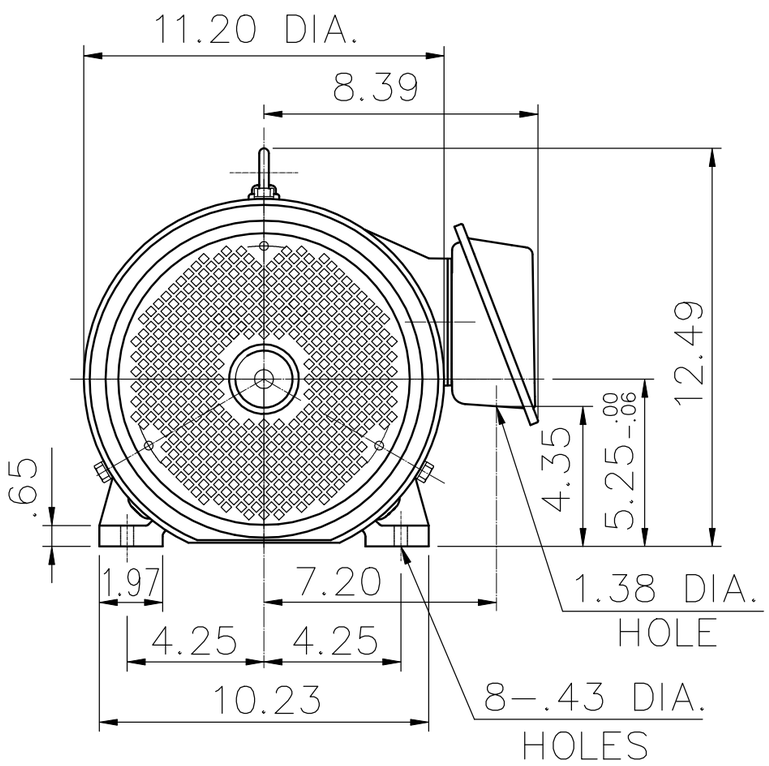

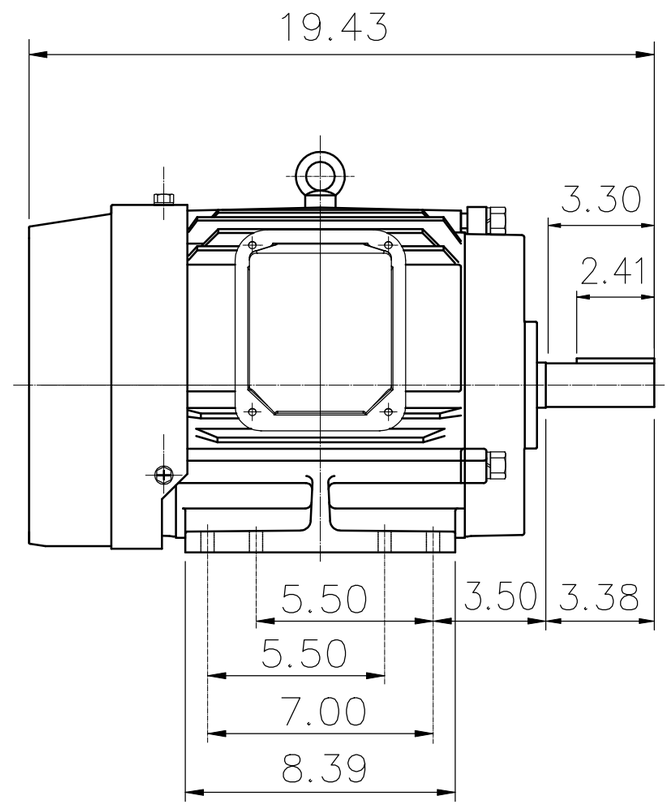

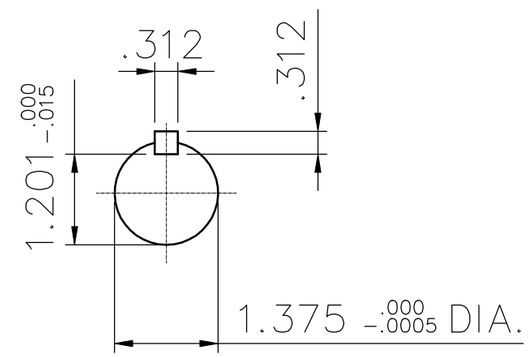

(1) DIMENSIONS ARE IN INCHES
(2) APPROXIMATE WEIGHT = 192 LBS.
(3) DRIVE END BEARING 6308ZZ
OPPOSITE DRIVE END BEARING 6208ZZ
(4) INTERNAL VOLUME OF CONDUIT BOX =50.3 CU, IN.

OUTPUT	POLE	SYN. SPEED	VOLT	FREQ.

CERTIFIED BY _____ DATE _____

TATUNG

DR. BY W. D. KUO
CK. BY L. J. LEE
APP. BY T. M. LIAO
DATE NOV. 27. 2008

DIMENSION SHEET

AS-870392