SUPER-MAX ALTERNATING CURRENT MOTORS

SQUIRREL-CAGE INDUCTION

ENCLOSURE: TOTALLY ENCLOSED
MOUNTING: FOOT

CAST IRON FRAME
FRAME 405TS

COOLING: FAN COOLED

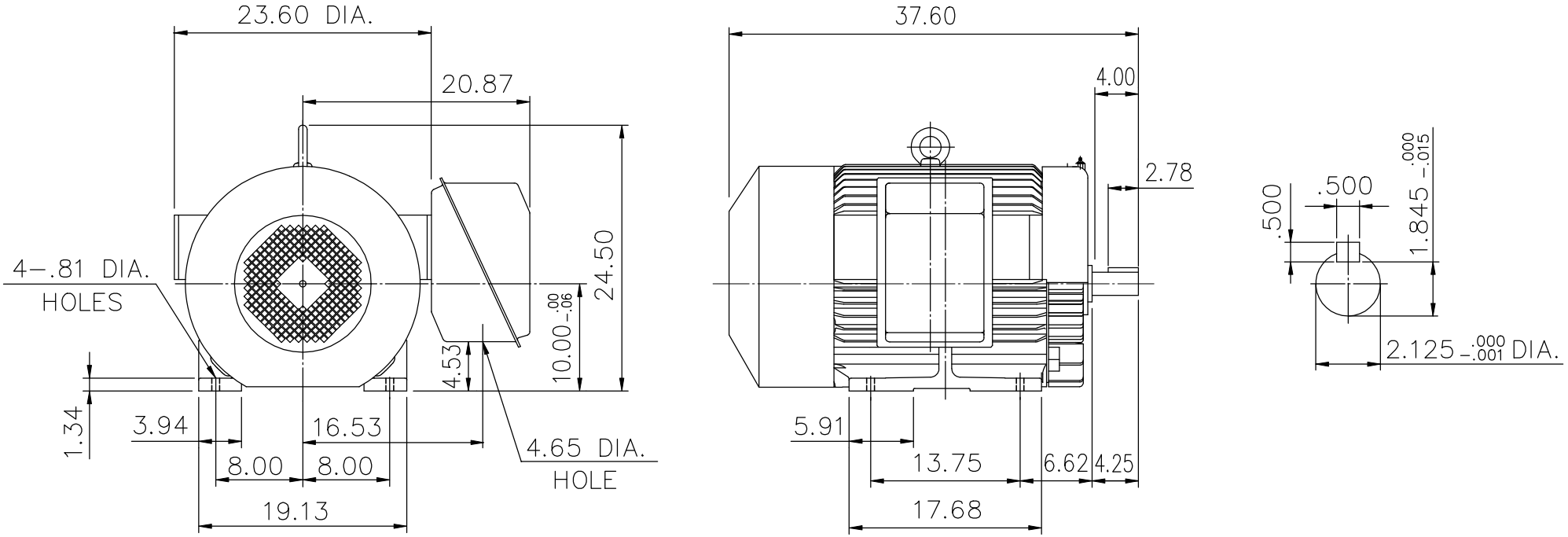

(1) DIMENSIONS ARE IN INCHES.
(2) APPROXIMATE WEIGHT = 1464 LBS.
(3) DRIVE END BEARING 6313C3
OPPOSITE DRIVE END BEARING 6313C3
(4) INTERNAL VOLUME OF CONDUIT BOX= 1185 CU , IN.

初步圖面，僅供參考

OUTPUT	POLE	SYN. SPEED	VOLT	FREQ.

CERTIFIED BY _____ DATE _____

TATUNG

DR. BY W. D. KUO
CK. BY L. J. LEE
APP. BY T. M. LIAO
DATE NOV. 27. 2008

DIMENSION SHEET

AS-966814